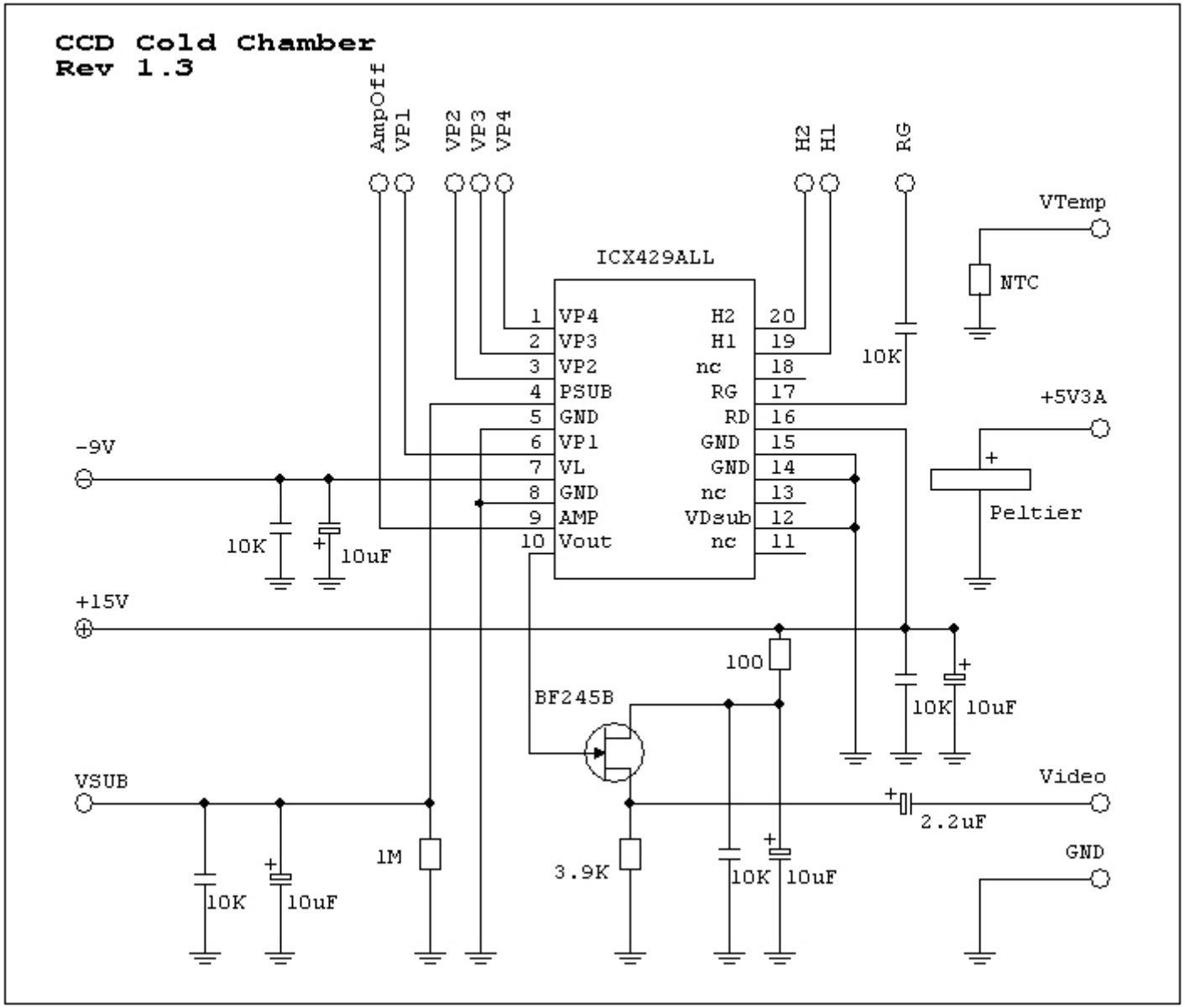
CCD Cold Chamber
Rev 1.3
AmpOff
VP1
VP2
VP3
VP4
H2
H1
RG
VTemp
NTC
ICX429ALL
1 VP4
2 VP3
3 VP2
4 PSUB
5 GND
6 VP1
7 VL
8 GND
9 AMP
10 Vout
H2 20
H1 19
nc 18
RG 17
RD 16
GND 15
GND 14
nc 13
VDsub 12
nc 11
10K
+5V3A
Peltier
-9V
10K
10uF
+15V
100
BF245B
10K
10uF
VSUB
Video
2.2uF
1M
3.9K
10K
10uF
GND
10K
10uF